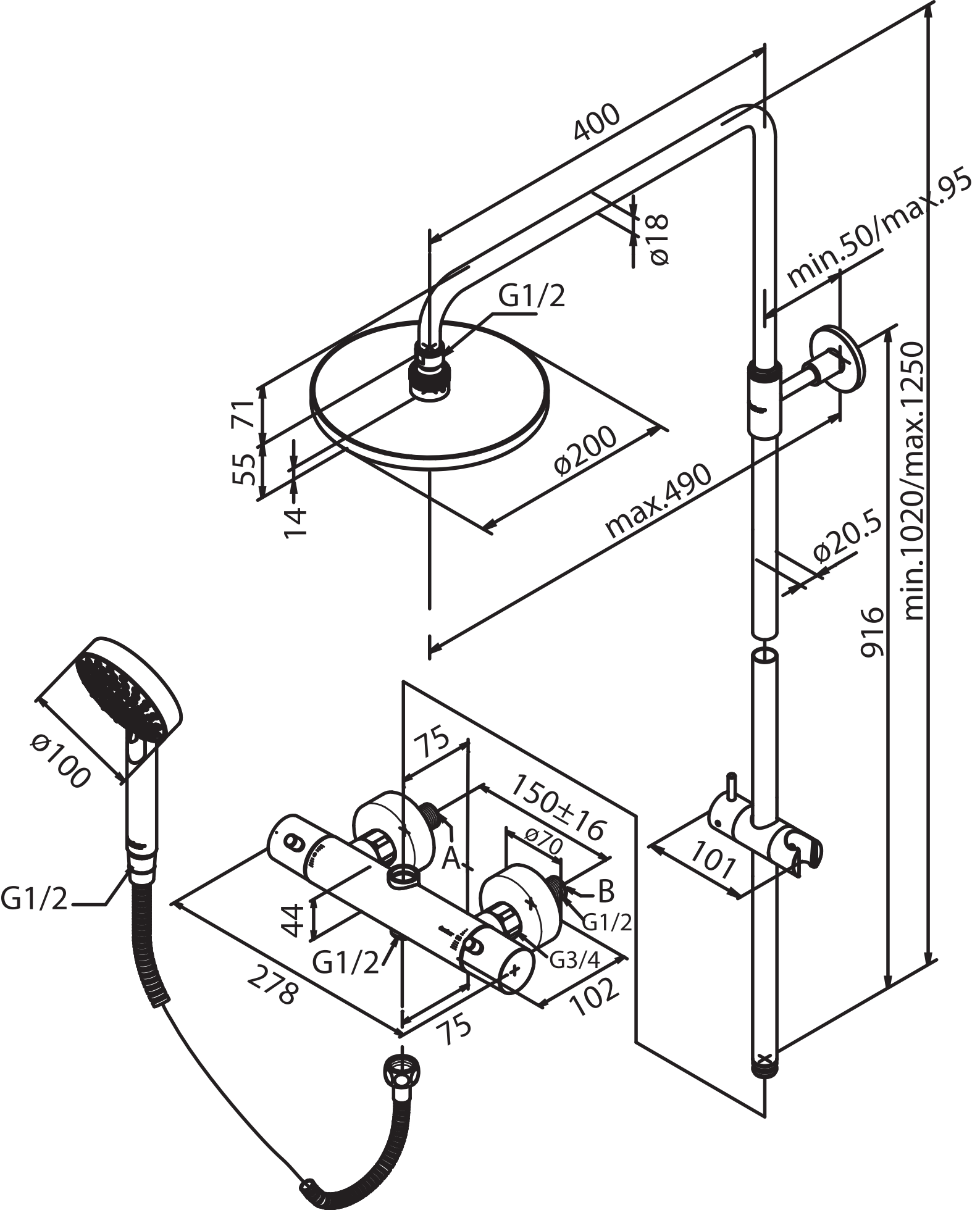
400
ø18
min.50/max.95
G1/2
71
55
14
ø200
max.490
ø20.5
916
min.1020/max.1250
ø100
G1/2
75
150±16
A
ø70
B
G1/2
44
G1/2
G3/4
278
75
102
101